SIMCO ION™

An ITW Company

Ion-O-Vac
Web & Sheet Cleaners

INSTALLATION AND OPERATING INSTRUCTIONS

TABLE OF CONTENTS

1. SAFETY WARNINGS 1

2. INTRODUCTION 3

Options Available for Web Applications 3
Options Available for Sheet Applications (Space Permitting) 3

3. SPECIFICATIONS 4

4. INSTALLATION 5

Vacuum Heads 5
Brush Setting 5
Collection System 7
Miscellaneous Items 8

5. WIRING 11

Magnetic Starter & Blower Motor 11
Power Supplies 12
Static Bars 13
Variable Speed Control for Mark IV Ion-O-Vac 13

6. PRIOR TO START-UP 14

7. MAINTENANCE 15

Vacuum Heads 15
Static Bars 15
Flexible Tubing or Ducts 16
Collection System 16

8. TROUBLESHOOTING 16

Static Bar Operational Test 16
D167RY, D267RY, F167 and F267 Power Unit Operational Test 17
Dust Collector 18
Ducting Collapsed or Plugged 19
Fan Exhaust is Restricted 19
Filter is Plugged with Fibrous Material 19

9. WARRANTY 20

10. DIMENSIONAL DRAWINGS 21

1. SAFETY WARNINGS

NOTE! Statements identified with a NOTE indicate precautions necessary to avoid potential equipment failure.

CAUTION! Statements identified with a CAUTION indicate minor or moderate injury is possible.

WARNING! Statements identified with a WARNING indicate serious injury is possible.

NOTE! This equipment must be correctly installed and maintained. Adhere to the following notes for safe installation and operation.

1. This equipment must be correctly installed and properly maintained. Adhere to the following cautions for safe installation and operation.
2. Read instruction manual before operating or installing device.
3. Qualified service personnel must do installation and repairs.
4. Ground the frame of the machine on which the power supply and neutralizing bars are mounted.
5. Disconnect supply voltage to power supply before connecting neutralizing bar to the high voltage terminal strip.

CAUTION! Electrical Shock Hazard

1. Do not touch bar when power supply is energized.
2. Disconnect supply voltage to power supply before connecting bar or performing any maintenance to the system.

WARNING! Fire Hazard

Do not install or operate equipment in close proximity to any flammable solvents or flammable materials.

This equipment must be correctly installed and properly maintained as outlined in this manual. Adhere to the following cautions for safe installation and operation:

1. Disconnect and lockout all power before servicing this machine, unless instructions state otherwise. Turn off web drive equipment and remove web, if possible, before performing maintenance.

2. Failure to properly ground the power supply may result in an electrical shock hazard to personnel and inefficient operation of the equipment. Do not apply line power until all grounds and high voltage connections have been completed.

3. Do not pour alcohol on bar or soak bar in alcohol at any time or damage to the inner bar assembly may result.

4. Do not hang rags on static bar or a fire may result

5. To avoid a potential fire hazard caused by sparks in the dust collector, do not mix combustible materials such as buffing lint, paper, wood, dust, aluminum and magnesium with dust generated from grinding ferrous metals.

6. Under no condition should machine operator put a lit cigarette or any burning object into the hood or ducting of the dust control system.

7. When collectors are used to collect dust at risk of fire or explosion, the dust collector should be located outside the building. An individual familiar with fire extinguishing equipment, flammable material hazards and local fire codes should be consulted for installation of the collector and installation of proper fire extinguishing equipment.

8. Explosion relief vents are required on some applications. Consult with an insurance underwriter or a NFPA MANUAL (NFPA 68 Venting Of Deflagrations – NFPA 91 Blower and Exhaust Systems) to determine proper vent size and ratio. Vents installed on dust control equipment within a building must be vented to the outside with ducting that meets the following specifications:
   - Cross sections are no smaller than the vent
   - No longer than 10'
   - Straight with minimal bends (to minimize chances of secondary explosion)
   - Fabricated from 16 gauge (or thicker) sheet steel

9. Consult the proper authorities to determine proper venting methods. Simco-Ion's dust collectors do not contain explosion relief-vents.

10. Consult and comply with all National and Local Fire Codes and/or other appropriate codes when determining the location and operation of dust collection equipment.

2. INTRODUCTION

The Ion-O-Vac sheet and web cleaning system consists of two main assemblies: The vacuum head and the collection system. For web applications, two vacuum heads are normally required. For sheet applications, one vacuum head is normally sufficient. The vacuum head provides a uniform high velocity air flow at the orifice across the entire width of the material being cleaned. A static eliminator is also provided with web cleaners to remove static prior to the cleaning process. Contaminants removed from the stock surface are carried to the collection system while the transporting air is returned to the plant free of contaminants.

There are two basic types of vacuum heads:

- Mark I, vacuum head with a pair of stationary brushes (one left hand and one right hand) or a pair of chad blades (for noncontact applications) One static eliminator is normally provided to remove static before the cleaning process.
- Mark IV, vacuum head with a combination of stationary brushes and a rotary brush located at the orifice of the vacuum head. Due to the static generated by the rotary brush, two static eliminators are normally provided to remove static before and after the cleaning process.

Options Available for Web Applications

Adjustable Orifice: If the vacuum heads are to be installed on top of the web with no roller underneath, this option is a must. On narrower web widths, this option will enable the operator to close off the ends of the orifice to avoid losing the vacuum.

Manual or Pneumatic Retraction System: If the vacuum heads are to be installed on top of an idler roller, this option will allow the operator to “swing” or “raise” the vacuum heads for ease of webbing and to allow access to the idler rollers. Note that Pneumatic Retraction Systems utilize air cylinders in place of the standard Micrometer Adjustment feature.

Options Available for Sheet Applications (Space Permitting)

Quick Release Brackets: This option allows the operator to easily remove the vacuum head from the press by simply engaging the quick release pins and sliding the vacuum head away from the impression cylinder.

Canister Collection System: Consists of a regenerative low CFM, high static pressure blower and a collector known as a canister which contains a pre-filter and a filter. This system also features an audible alarm which is activated when the filter needs changing.

3. SPECIFICATIONS

Vacuum System		
Requirements	MK-I: 4.0″ of water (min)	MK-IV: 4.0″ of water (min)
Volume	MK-I: 6.5 cfm per inch of intake	MK-IV: 14 cfm per inch of intake
MEB Static Bar Power Supply		
High Voltage	F167 (120 VAC, 50/60 Hz, 0.25A)	F267 (230 VAC, 50/60 Hz, 0.12A)
	NOTE: Maximum 2 static bars or 200″ total static bar length can be used with power supply models F167 and F267.	
Power Supply	D167RY (120 VAC, 50/60 Hz, 0.25A)	D267RY (230 VAC, 50/60 Hz, 0.12A)
	Note: Maximum 4 static bars or 200″ total static bar length can be used with power supply models D167RY and D267RY.	

Vacuum Heads

For installation of vacuum heads, please refer to the attached installation prints.

Mark I Vacuum Heads for Web Applications

Install the vacuum heads as shown on the installation print, paying particular attentions to the relative position of the static bar and vacuum head orifice with respect to the direction of the web path. The web should pass under the static bar first (to eliminate static) and then pass under the orifice for cleaning. The vacuum head can be installed on top of an idler roller or web. It is preferable that the vacuum head is installed on top of an idler roller to maintain orifice air velocity. After the vacuum heads are installed, **DO NOT RUN THE MACHINE! PROCEED TO BRUSH SETTINGS.**

Mark I Vacuum Heads for Sheet Applications

Install the vacuum head as shown on the installation print, ensuring that the vacuum head brushes sit about 1/16" off the impression cylinder. After the vacuum head is installed, **DO NOT RUN THE PRESS; PROCEED TO BRUSH SETTINGS.**

Mark IV Vacuum Heads for Web Applications

Install the vacuum heads as shown on the installation print, paying particular attention to the relative position of the mounting brackets and the angle of the vacuum heads against the idler rollers or web. The vacuum heads must be installed perfectly so that the rotary brush and stationary brush are all just “kissing” the idler roller or web. The Mark IV vacuum heads are designed with two static bars to remove static before and after the cleaning process. Note that Mark IV vacuum heads that have been designed to fit over an idler roller are designed to fit over a specific diameter roller and cannot be used for other diameter size rollers. After the vacuum heads are installed, **DO NOT RUN THE MACHINE; PROCEED TO BRUSH SETTING.**

Brush Setting

Mark I and Mark IV Vacuum Heads for Web Applications

Before locking all the bolts on mounting brackets, make sure the brushes are set properly to the idler roller or on top of the web. The tip of the bristles should “kiss” the material to be cleaned. Do not shove the brushes against the roller or web; this will just wear out the bristles prematurely. The vacuum head must be adjusted evenly to prevent the vacuum head from jamming in the bracket. Adjust the vacuum head by turning the micrometer adjustment (or the optional pneumatic reaction shaft) until the brush bristles “kiss” the material to be cleaned (Figures 1,

2). Then tighten the adjustment locknuts to secure in place. For vacuum heads supplied with chad blades, adjust the vacuum heads until there is a "1/32" to 1/16" gap between the material to be cleaned and the tip of the chad blades (Figure 3). Then tighten the adjustment locknuts to secure in place. Make sure that the vacuum heads are fastened securely in place. Inch the machine and check for clearance. For vacuum heads with manual or pneumatic retraction systems, retract the vacuum heads and check for clearance. The vacuum heads should not interfere with the normal operation of the web machine. After all clearances are checked, proceed to **COLLECTION SYSTEM.**

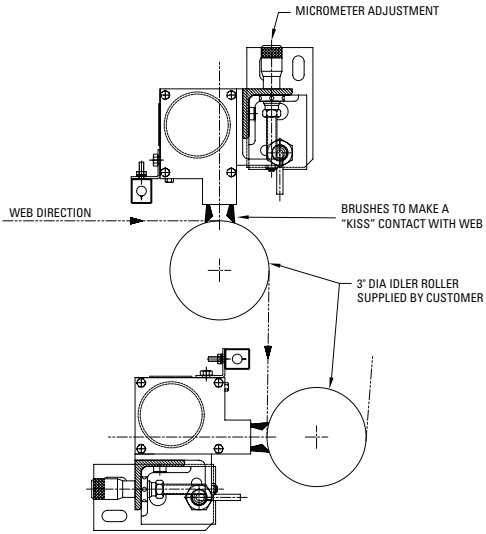

Figure 1. Brush Settings on Mark I Ion-O-Vac

NOTE: Raise or lower the vacuum heads to make sure the brush makes a "kiss contact".

Mark I Vacuum Heads for Sheet Applications

Lock all bolts in the mounting brackets. All Ion-O-Vacs for sheet-fed presses are designed with micrometer adjustment (see Figure 4). Set the brushes to the impression cylinder as follows:

1. Raise the vacuum head to its highest position with the micrometer adjustment bolts (counterclockwise).
2. Lower the vacuum head with micrometer adjustment bolts evenly (clockwise) until the brushes are about 1/16" off of the impression cylinder.
3. Lock the micrometer adjustment bolts.
4. Inch the press and check for clearance.

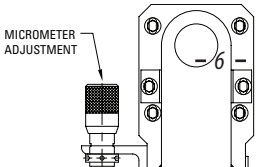

Figure 2. Brush Settings for Mark IV Ion-O-Vac

NOTE: Raise or lower the vacuum heads until all brushes make a "kiss" contact with the web material.

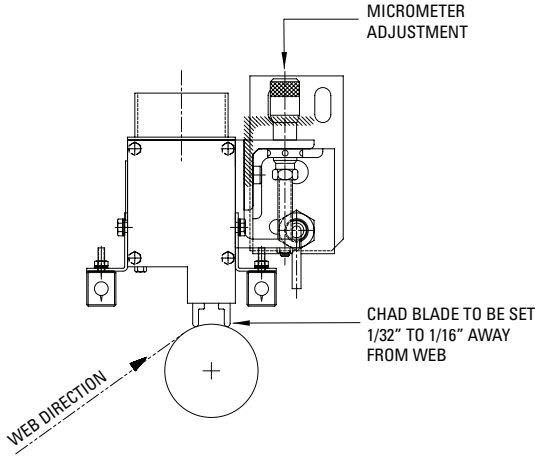

Figure 3. Brush Setting for Mark I Ion-O-Vav with Chad Blades

NOTE: Raise or lower the vacuum heads until the tip of the chad blades are about 1/16" away from the web material.

Collection System

There are five different configurations for the Canister Collection System. The dimensions are shown in the latter part of this manual.

Find a location for your collection system. When finding a location, remember that only 8 feet of flexible ducting is supplied with your equipment. If the collection system is to be located beyond the 8 foot supplied, then use a rigid ducting (PVC type) with glued seams (to avoid loss of the vacuum) avoiding elbows and sharp bends as much as possible. Do not use more than 25 feet of at least 6" diameter additional ducting unless the unit is specifically designed for extensive ducting. Assemble the collection system as shown in the print. For collection systems with sound suppressors, make sure that all the seams have been sealed with silicone (or similar type) to prevent vacuum loss. After collection system is located and assembled, proceed to **MISCELLANEOUS ITEMS.**

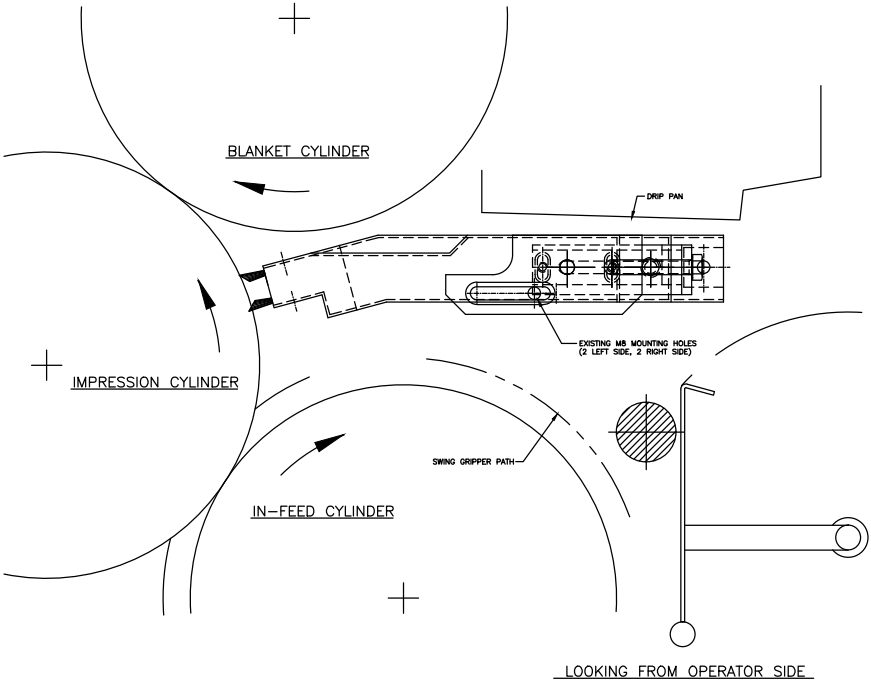

Figure 4. Brush Setting for Mark I Sheet Cleaner

NOTE: Raise or lower the vacuum head with the micrometer adjustment bolts until the tip of the brushes are about 1/16" off of the impression cylinder.

Miscellaneous Items

Manifold (where applicable)

Install manifold as shown in the installation prints. Make sure that it is fastened securely to the vacuum head and that all joints and seams are sealed with silicone (or similar type) to prevent vacuum loss. Check clearance and ensure that the manifold does not interfere with safety guards and normal operation of the machine. Any dampers or baffles supplied are normally closed for transit.

Flexible Tubing and Ducts

After the manifolds are installed (where applicable) install the 8 foot flexible ducting to the outlet of the vacuum heads and secure in place with hose clamps. Install the other end of the flexible ducting to the inlet of the evacuator and secure with hose clamps. If the evacuator has been located beyond the 8 foot flexible ducting supplied, then use a rigid ducting (PVC type) with glued seams (to avoid vacuum loss), avoiding elbows and bends as much as possible.

Power Supply

The power supply (Model F167) is a transformer that supplies power to the static bars and is normally shipped separately with your equipment. When positioning the power supply, remember that the static bars are normally supplied with a 10 ft. power cable. Locate the power supply in an area free of dirt, oil, water or excessive heat.

Static Bars

Static bars are normally supplied with web cleaners. There are occasions when the static bar is removed from the head to prevent damage during transit. In this case, reinstall the static bar to the vacuum head as per installation prints. For applications with limited space, install the static bar remotely from the vacuum head as per installation print. Install the static bar within 1" of the material to be neutralized. When installing, do not cover emitter points with the clamps. Route the power cable to the power supply, making certain that the cable does not touch any grounded metal machine parts. Use stand-off insulators provided or PVC tubing as necessary. For wiring the static bar to the power supply, refer to **Section 5. WIRING**.

Compressed Air for Pneumatic Retraction Systems

For Ion-O-Vac with the Pneumatic Retraction System option, the following items will require some assembly; 40 foot air hose, 4-way valve, and filter/regulator. A minimum of 60 PSIG is required to operate the pneumatic retraction system. See print number 202-0042-00 for further instructions on how to route the air hoses and fittings. The control valve is normally located close to the operator for easy access during webbing.

NOTE: Flow control valves are factory set and should not require any adjustment.

Variable Speed Control

For Mark IV Ion-O-Vacs with rotary brushes, a variable speed control is supplied to control the drive motor. This should be located close to the operator for easy access during operation. See Figures 6 general dimensions.

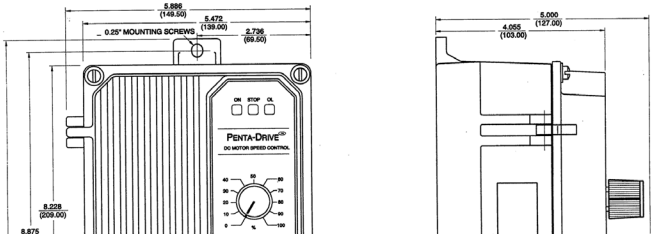

Figure 6. Variable Speed Control General Dimensions (Penta-Drive)

Magnetic Starter & Blower Motor

The magnetic starter is shipped with the overload relay already installed. For wiring instructions for the Siemens' magnetic starter, see Print #202-0041-00. For installation of the Reset Button on a Siemens' magnetic starter, refer to Figure 9.

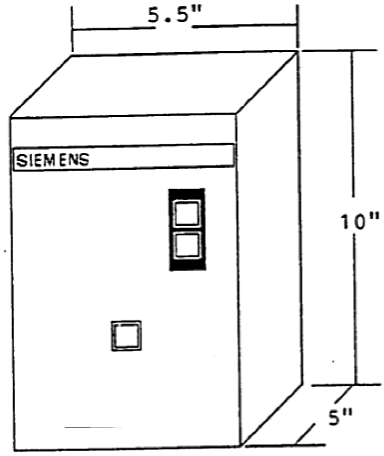

Figure 8. Magnetic Started General Dimensions (Siemens)

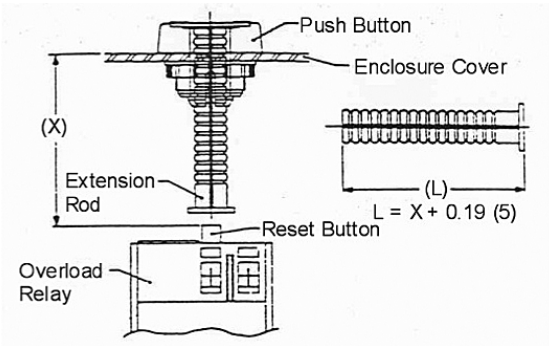

Figure 9. Reset Button installation (Siemens)

Remove the knockout in the cover or door and measure the dimension "X". Add 0.19 inches/5 mm to length "X". Cut or break off the extension rod to the next longer notch; dimension "L".

Install the reset button. Make sure that the reset extension rod does not unintentionally press the reset button with the cover/door closed causing the overload relay to be in a continuous automatic mode and does reset the overload relay when intentionally pressing the button from the front of the enclosure.

Power Supplies

The power supply can be wired separately from the equipment, or a single-phase voltage can be picked up on the magnetic starter so that the power can be controlled with the collection System. Make sure that the three-phase voltage matches the input voltage requirement on the power supply. See Figure 10 and follow the instructions below:

1. Install the power supply securely. Keep free of dirt, oil and water and keep away from excessive heat.
2. If the power supply is not grounded through the line cord, connect a 16 GA copper wire between the ground stud and cold water pipe or a grounded machine frame. Clean the grounding surface of paint, dirt, etc. (DO NOT connect to gas or hot water pipe.)
3. Remove dust cap and insert connector until it engages to the high voltage connector spring. Tighten the screw cap into the high voltage terminal.
4. Connect the line cord to the electrical supply per nameplate specifications (120V units are supplied with a 3-wire cord and a male plug; 230V units are supplied with a 3-wire cord with a stripped, tinned lead).
5. For added safety and extended life for those units without an integral power switch, input voltage to the power supply should be shut off when not in use. If possible, connect input voltage to the power supply through the machine "ON/OFF" and/or "RUN" circuit.

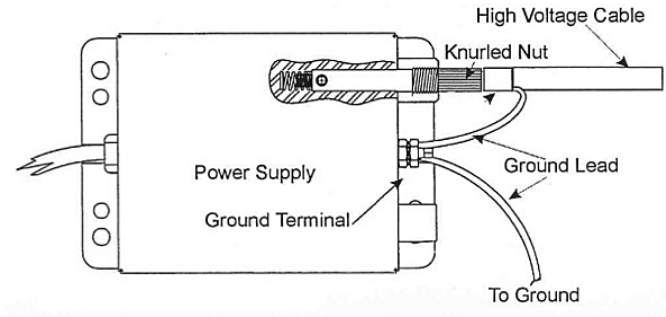

Figure 10. Power Supply

Static Bars

Before the static bars can be connected to the power supply, the spring loaded cable connector kit must be installed on the cable for the static bar. See Figure 11 for installation of the connector kit to the power cable:

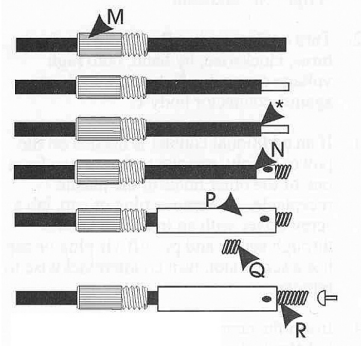

Figure 11. Spring Loaded Connector Installation

1. Cut cable off at desired length, then slide knurled plug M (knurled end first) over cable.
2. **NOTE: MEASURE CAREFULLY, ACCURACY IS IMPORTANT**.
3. Strip ½" insulation off end of cable.
4. Straighten copper conductor wires. DO NOT TWIST.
5. Slide high voltage connector N over conductor until it butts against cable insulation. Be sure all strands of the conductor are inserted into the connector.
6. Slide connector body P over high voltage connector until hole in connector body lines up with set screw hole in the connector.
7. Insert set screw Q in connector through the hole in the connector body and tighten.
8. After tightening, if set screw is not flush with or slightly below surface of connector body P, disassemble and remove additional strands of wire from the conductor to allow the set screw to be at least flush with the connector body P.
9. Pull firmly to be sure voltage connector N is tight on conductor.
10. Turn contact spring R – end with close turns, clockwise, by hand, onto high voltage connector N until spring butts against connector body.
11. If an additional contact is needed on the power supply, remove a plug or cap from one of the other holes in the plastic receptacle. To remove plug or cap, jab a screwdriver with an insulated handle through center and pry off. If plug or cap has a screw slot, turn counterclockwise to remove.
12. Insert the connector into the hole and tighten the knurled plug. FINGER TIGHT ONLY.

Variable Speed Control for Mark IV Ion-O-Vac

The installation manual for both Fincor and Bodine speed controls is shipped with the speed controls. Please refer to the manufacturer's manual when wiring the variable speed control to the cylinder brush drive motor.

6. PRIOR TO START-UP

To avoid damage to the press, please use the checklist below before starting up the Ion-O-Vac web and sheet cleaner:

1. **Check Clearances:** Inch the press and check for clearance to the vacuum heads. For a sheet-fed press, make sure that the gripper bars do not hit the vacuum head assembly. For Ion-O-Vacs with a manual or pneumatic retraction system, make sure that the vacuum heads or the drive motor does not interfere with normal press operation both in retracted or normal position.

2. **Check Seams:** To avoid vacuum loss, check all the seams and make sure that they are sealed properly.

3. **Check Voltages:** Double check that all power input corresponds to the nameplates of the collection system, power supplies, drive motors, speed controls and magnetic starter. Make sure that the overload relay is set at the appropriate amperage rating.

4. **Check Dampener Settings:** To avoid damage to the collection system, double check all ducting dampeners to make sure they are open.

7. MAINTENANCE

Although the Ion-O-Vac is virtually maintenance free, a system of preventive maintenance should be set up to insure maximum efficiency and service life paying particular attention to the following points:

Vacuum Heads

1. Check the orifice and clean out as necessary. A small stiff brush or a blast of high pressure air should be sufficient.
2. Remove the flex hose connection from the vacuum head assembly and check for any sheets or material that might have been "sucked" inside the vacuum head.
3. The brushes should be cleaned or replaced regularly. The length of time between cleaning and replacement will be dependent primarily on the nature of the material being cleaned. Brush bristles should not be permitted to become stiff with ink or coatings or become excessively dirty.
4. Check the brush setting in relation to the material being cleaned, refer to Section 2 under brush settings.
5. On Mark IV vacuum heads with a rotary brush, remove side plate and check the doctor blade to insure that it is adjusted correctly. It should engage the rotary brush by 1/32" to 1/16".
6. Check all mounting bolts and tighten as necessary.

Static Bars

For maximum efficiency, it is essential that the ionizing points located on the inner bar be kept clean. If metal filings or material fragments fall into the static bars, they can short circuit that section of the bar and make it inoperative until the particles are removed. Periodic use of a soft brush or compressed air will prevent the points from accumulating hardened balls of lint, grease and other foreign matter that reduce their sharpness and decrease efficiency.

1. Turn off line power to the power supply before cleaning, removing static bars from the vacuum heads or machine or before breaking any ground connections.
2. Remove loose particles with compressed air.
3. To remove built-up deposits, press a soft pencil eraser down on the emitter point. Twist the pencil slightly and remove.
4. If particles cannot be dislodged with air or soft pencil erasers, remove the bar, turn the bar face down and tap it. Mount the bar back in position and tighten.

5. Resistant coatings may be removed with Isopropyl Alcohol (without additives) applied with a clean cloth. Do not pour Isopropyl Alcohol on the bar or soak the bar or any of its components in the alcohol. Do not use any other commercial cleaners or solvents, or parts may be damaged. Dry thoroughly. Do not attempt to scrape the points. The points must remain as sharp as possible for optimum operation. If the points become dull or damaged, the bar must be replaced. Let all alcohol evaporate completely before restoring power to the bar.

Flexible Tubing or Ducts

1. Ducting should be checked for blow-outs, punctures or other openings.
2. Check for any restrictions or dirt accumulation inside the ducting.

Collection System

This system incorporates an audible alarm which activates when the filter needs to be cleaned or replaced. Make sure that the bypass air inlet (between the canister and blower) is clean and open.

To clean the filter, blow from inside out with a high pressure air hose. The pre filter may be washed out with mild soap and water.

8. TROUBLESHOOTING

Static Bar Operational Test

Equipment Needed: TenSION Voltage Detector (Part # 4050556)

WARNING! Fire Hazard

Remove intrinsically safe equipment (XP-2) from hazardous area or wait until hazardous area clears of all volatile fumes before performing this procedure.

CAUTION: High Voltage - Refer testing to qualified personnel

1. Hold the TensION at a distance from the ionizing points / emitters. If a high voltage is present, a red indicator in the plastic tip will illuminate.
   a) If test produces no indication of voltage, perform static bar cleaning procedure then check affected points for metal fragments. Repeat Steps 1 of the static bar operational test after performing cleaning procedure.
   b) If TensION shows no indication of voltage on any points, perform power supply test (see below).
   c) If it is determined that the power supply is operative, and more than one static bar is in use, locate the faulty bar.

CAUTION! Electrical Shock Hazard

Power supply must be turned off during disconnection and re-connection of static bar.

1. Disconnect all but one static bar from the high voltage terminal.
2. Use TensION to test several points on the bar. If orange-red glow occurs, the bar is functioning properly. Disconnect that bar and reconnect next bar. Check all bars until faulty bar(s) is located by no glow.

D167RY, D267RY, F167 and F267 Power Unit Operational Test

Equipment needed:

- Multimeter – Fluke Model 70 Series or equivalent
- High Voltage Probe – Fluke Model 80 K or equivalent with minimum 20 KVAC rating

CAUTION: High Voltage

Refer testing to qualified service personnel. Failure to do this can affect a product's operation and can result in personal injury.

1. Verify power supply is off and static bar(s) are disconnected.
2. Set multimeter for AC voltage so that it can read 20KVAC full scale. Connect high voltage probe to multimeter and connect ground lead on high voltage probe to ground.
3. Connect a short (approximately 4") piece of stiff wire to contact on end of high voltage probe.
4. Insert wire into high voltage connector making contact with screw head inside high voltage connector on power supply.
5. Turn on power supply. Operating voltage should be between 7500 VAC and 8100 VAC. The power supply is not functioning properly if it is not operating between these voltages.

NOTE: Input voltage to power supply must be the same as on power supply label.

6. Turn off power supply.
7. Remove high voltage probe from connector in power supply.

Dust Collector

CAUTION! Electrical Shock Hazard

A qualified electrician must perform all electrical work. Failure to do this can affect a product's operation and can result in personal injury.

If blower motor will not start:

- Proper wire size was not used. Rewire per local and national codes
- Motor is not wired correctly. Rewire, referring to motor wiring diagram located on motor
- Unit is not wired for available voltage. Correct wiring for proper input voltage
- Input circuit down. Check input to motor circuits for voltage on all leads

NOTE: A blower motor is easily overloaded when it is forced to handle too much air. An insufficient air supply causes few, if any, problems. Simco-Ion Dust Collectors are designed to make maximum use of the motor's horsepower but, they are not under powered. Any motor that indicates an amperage draw in excess of 10% of the manufacturer's recommendation on the nameplate is overloaded. Overloading may be caused by one or more of the conditions under "if blower motor will not start."

If blower motor starts, but does not keep running:

- Incorrect starter heater elements are installed. Replace with proper heater elements
- Slide gate or hopper exits are not closed properly. Close gate or exits properly
- Insufficient supply voltage. Check the supply voltage to verify that it meets the motor manufacturer's requirements on the nameplate
- Insufficient air flow
- Fan rotating backwards. Change the fan rotation (for three phase only):
  - Disconnect dust collector from electrical outlet
  - Look at the rotation sticker on the fan housing for proper rotation direction
  - Change the motor rotation by interchanging any two supply leads (three phase only). On single phase motors, the internal wiring will have to be changed. Reference motor wiring diagram
  - Reconnect dust collector to electrical outlet

Ducting Collapsed or Plugged

- Remove and replace collapsed ducting
- Remove and clean out debris that is blocking ducting

Fan Exhaust is Restricted

- Remove the debris that is blocking the fan exhaust area
- Remove all loose material stored on top of the collector

Filter is Plugged with Fibrous Material

- Disconnect dust collector from electrical outlet
- Empty the filter canister
- Reconnect dust collector to electrical outlet

9. WARRANTY

This product has been carefully tested at the factory and is warranted to be free from any defects in materials or workmanship. Simco-Ion will, under this warranty, repair or replace any equipment that proves, upon our examination, to have become defective within one year from the date of purchase.

The equipment being returned under warranty should be shipped by the purchaser to Simco-Ion, 2257 North Penn Road, Hatfield PA 19440, transportation prepaid and insured for its replacement cost. Prior to returning any goods for any reason, contact Simco-Ion Customer Service at (215) 822-6401 for a Return Authorization Number. This number must accompany all returned items.

This warranty does not apply when the equipment has been tampered with, misused, improperly installed, altered, has received damage through abuse, carelessness, accident, connected to improper line voltage, or has been serviced anyone other than an authorized factory representative.

The warranty does not apply when Simco-Ion parts and equipment have been energized by other than the appropriate Simco-Ion power supply or generator, or when a Simco-Ion power supply or generator has been used to energize other than Simco-Ion parts and equipment. Simco-Ion makes no warranty, expressed or implied, nor accepts any obligation, liabilities, or responsibility in connection with the use of this product other than the repair or replacement of parts stated herein.

Information in this publication supersedes that in all previous published material. Specifications are subject to change without notice.

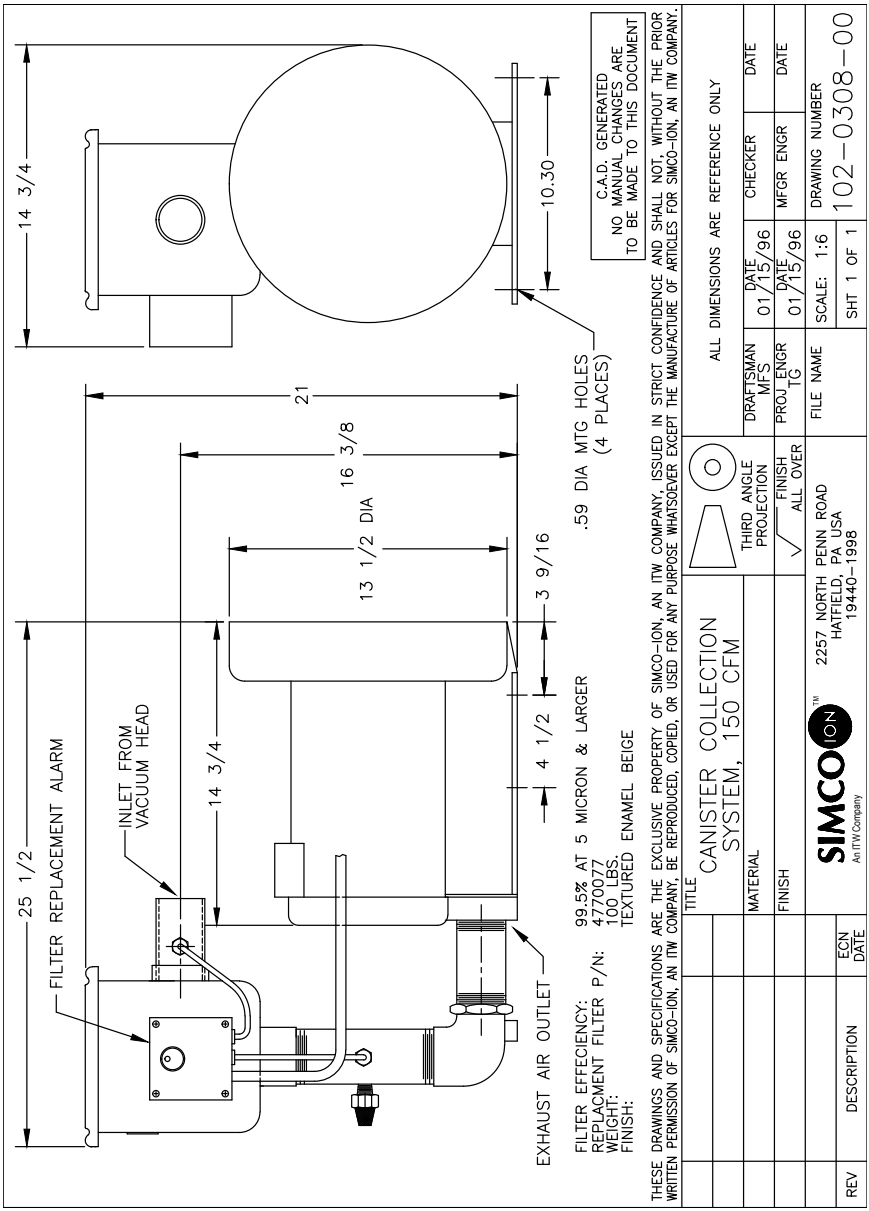
25 1/2
FILTER REPLACEMENT ALARM
INLET FROM VACUUM HEAD
14 3/4
21
16 3/8
13 1/2 DIA
3 9/16
4 1/2
14 3/4
10.30
.59 DIA MTG HOLES (4 PLACES)
EXHAUST AIR OUTLET
FILTER EFFECIENCY: 99.5% AT 5 MICRON & LARGER
REPLACMENT FILTER P/N: 4770077
WEIGHT: 100 LBS.
FINISH: TEXTURED ENAMEL BEIGE
C.A.D. GENERATED
NO MANUAL CHANGES ARE
TO BE MADE TO THIS DOCUMENT
THESE DRAWINGS AND SPECIFICATIONS ARE THE EXCLUSIVE PROPERTY OF SIMCO-ION, AN ITW COMPANY, ISSUED IN STRICT CONFIDENCE AND SHALL NOT, WITHOUT THE PRIOR WRITTEN PERMISSION OF SIMCO-ION, AN ITW COMPANY, BE REPRODUCED, COPIED, OR USED FOR ANY PURPOSE WHATSOEVER EXCEPT THE MANUFACTURE OF ARTICLES FOR SIMCO-ION, AN ITW COMPANY.
ALL DIMENSIONS ARE REFERENCE ONLY
TITLE
CANISTER COLLECTION SYSTEM, 150 CFM
MATERIAL
FINISH
THIRD ANGLE PROJECTION
FINISH ALL OVER
DRAFTSMAN MFS
DATE 01/15/96
CHECKER
DATE
PROJ ENGR TG
DATE 01/15/96
MFGR ENGR
DATE
FILE NAME
SCALE: 1:6
SHT 1 OF 1
DRAWING NUMBER
102-0308-00
SIMCO ION
An ITW Company
2257 NORTH PENN ROAD
HATFIELD, PA USA
19440-1998
REV
DESCRIPTION
ECN
DATE

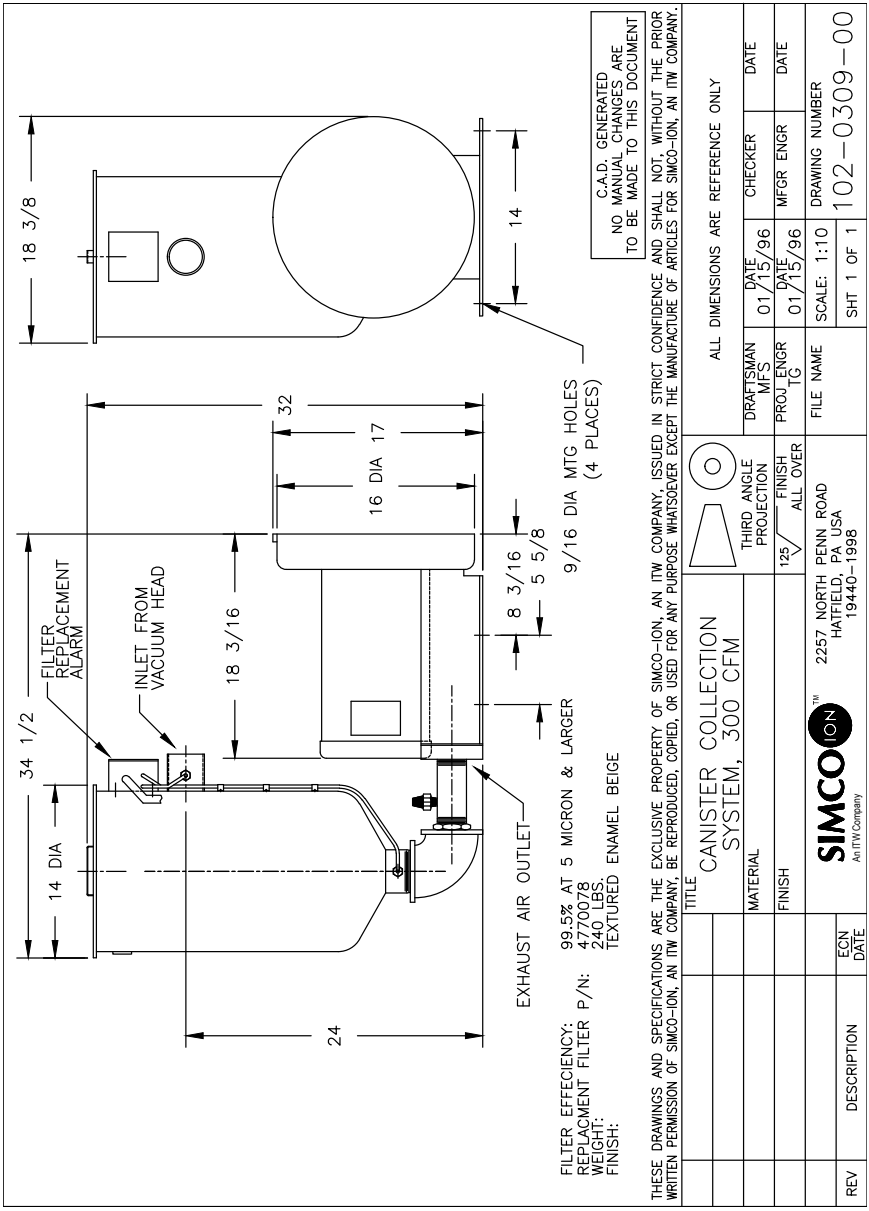
18 3/8
14
C.A.D. GENERATED
NO MANUAL CHANGES ARE
TO BE MADE TO THIS DOCUMENT
32
16 DIA 17
9/16 DIA MTG HOLES
(4 PLACES)
8 3/16
5 5/8
18 3/16
34 1/2
FILTER
REPLACEMENT
ALARM
INLET FROM
VACUUM HEAD
14 DIA
24
EXHAUST AIR OUTLET
FILTER EFFECIENCY: 99.5% AT 5 MICRON & LARGER
REPLACMENT FILTER P/N: 4770078
WEIGHT: 240 LBS.
FINISH: TEXTURED ENAMEL BEIGE
THESE DRAWINGS AND SPECIFICATIONS ARE THE EXCLUSIVE PROPERTY OF SIMCO-ION, AN ITW COMPANY, ISSUED IN STRICT CONFIDENCE AND SHALL NOT, WITHOUT THE PRIOR WRITTEN PERMISSION OF SIMCO-ION, AN ITW COMPANY, BE REPRODUCED, COPIED, OR USED FOR ANY PURPOSE WHATSOEVER EXCEPT THE MANUFACTURE OF ARTICLES FOR SIMCO-ION, AN ITW COMPANY.
ALL DIMENSIONS ARE REFERENCE ONLY
THIRD ANGLE PROJECTION
125 FINISH ALL OVER
DRAFTSMAN MFS
DATE 01/15/96
CHECKER
DATE
PROJ ENGR TG
DATE 01/15/96
MFGR ENGR
DATE
FILE NAME
SCALE: 1:10
SHT 1 OF 1
DRAWING NUMBER
102-0309-00
TITLE
CANISTER COLLECTION
SYSTEM, 300 CFM
MATERIAL
FINISH
SIMCO ION
An ITW Company
2257 NORTH PENN ROAD
HATFIELD, PA USA
19440-1998
REV
DESCRIPTION
ECN
DATE

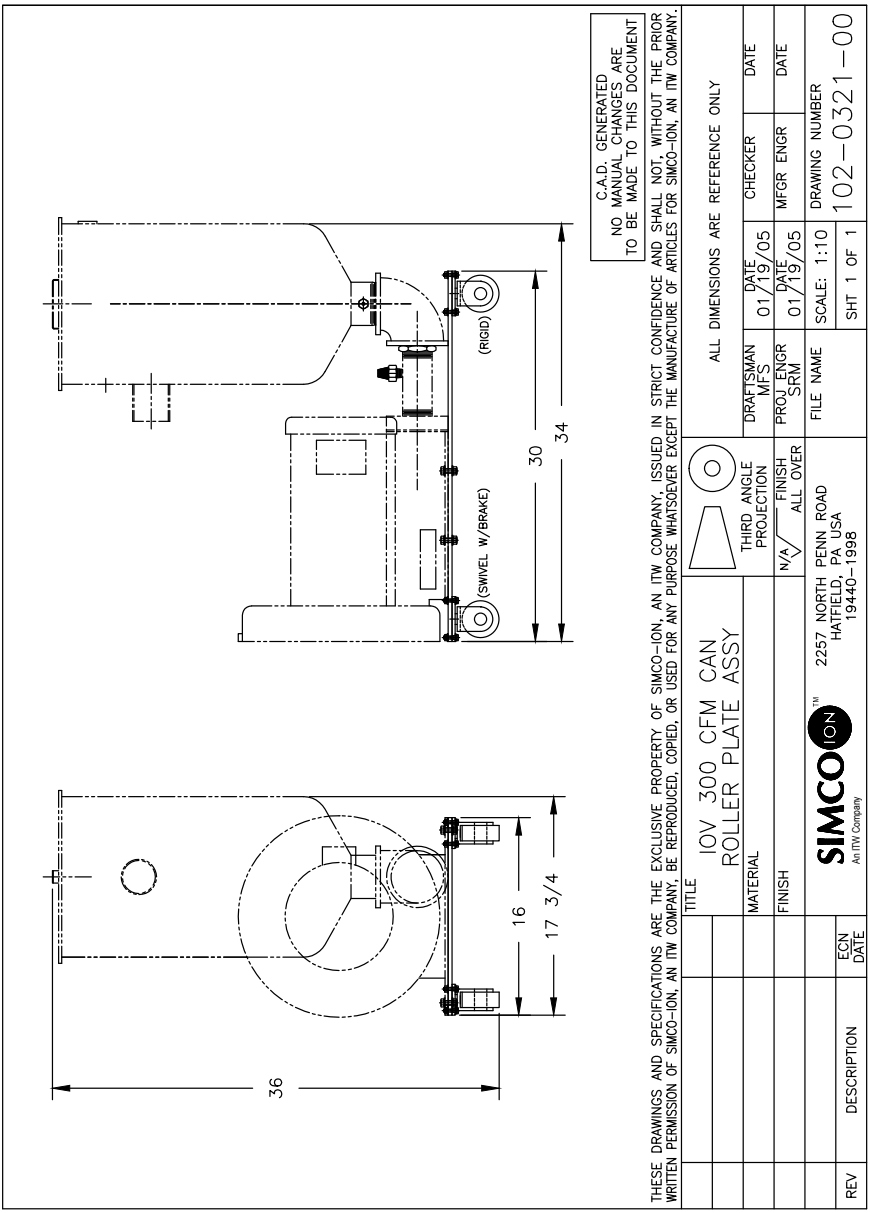
C.A.D. GENERATED
NO MANUAL CHANGES ARE
TO BE MADE TO THIS DOCUMENT
(SWIVEL W/BRAKE)
(RIGID)
30
34
36
16
17 3/4
THESE DRAWINGS AND SPECIFICATIONS ARE THE EXCLUSIVE PROPERTY OF SIMCO-ION, AN ITW COMPANY, ISSUED IN STRICT CONFIDENCE AND SHALL NOT, WITHOUT THE PRIOR WRITTEN PERMISSION OF SIMCO-ION, AN ITW COMPANY, BE REPRODUCED, COPIED, OR USED FOR ANY PURPOSE WHATSOEVER EXCEPT THE MANUFACTURE OF ARTICLES FOR SIMCO-ION, AN ITW COMPANY.
ALL DIMENSIONS ARE REFERENCE ONLY
TITLE
IOV 300 CFM CAN
ROLLER PLATE ASSY
MATERIAL
FINISH
THIRD ANGLE PROJECTION
N/A
FINISH ALL OVER
DRAFTSMAN MFS
DATE 01/19/05
CHECKER
DATE
PROJ. ENGR SRM
DATE 01/19/05
MFGR ENGR
DATE
FILE NAME
SCALE: 1:10
SHT 1 OF 1
DRAWING NUMBER
102-0321-00
SIMCO ION
An ITW Company
2257 NORTH PENN ROAD
HATFIELD, PA USA
19440-1998
REV
DESCRIPTION
ECN
DATE

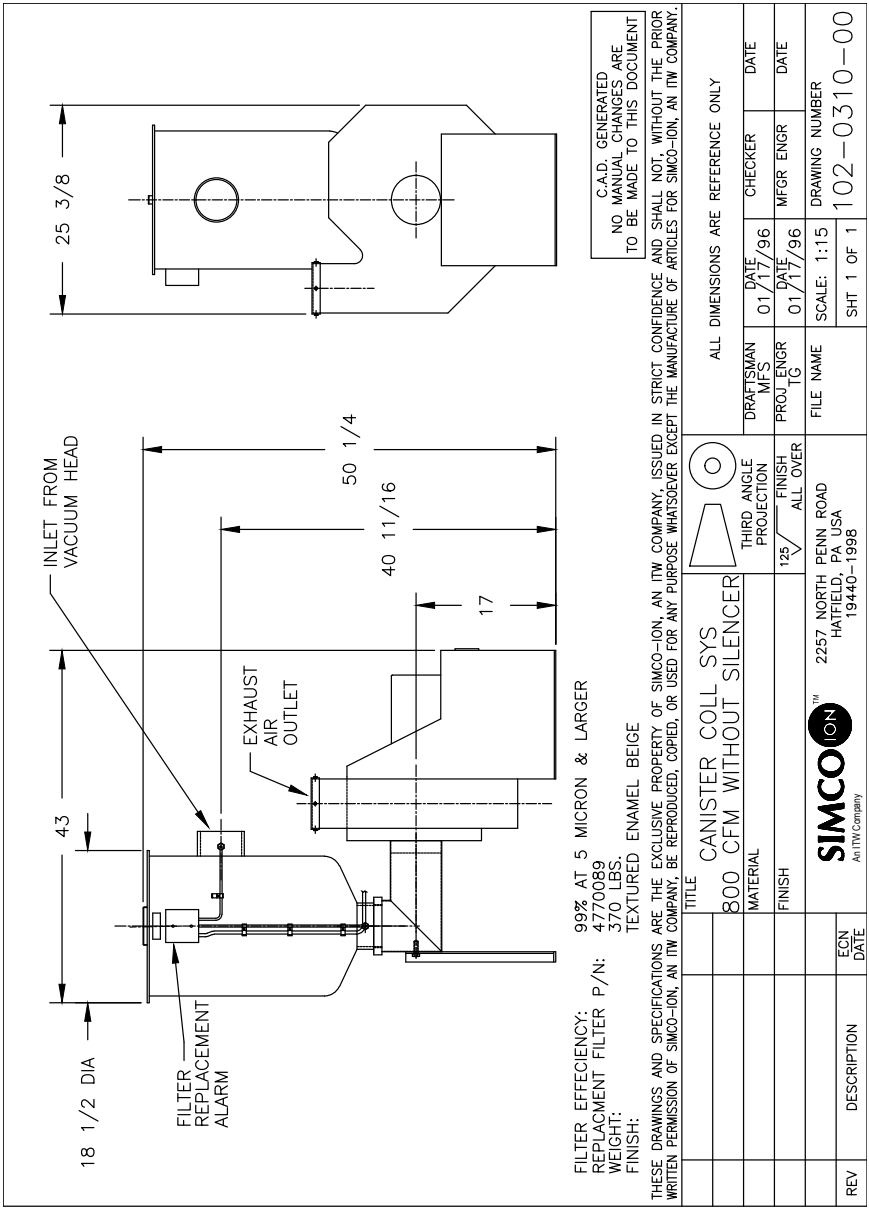
25 3/8
C.A.D. GENERATED
NO MANUAL CHANGES ARE
TO BE MADE TO THIS DOCUMENT
INLET FROM
VACUUM HEAD
50 1/4
40 11/16
17
43
EXHAUST
AIR
OUTLET
18 1/2 DIA
FILTER
REPLACEMENT
ALARM
FILTER EFFECIENCY: 99% AT 5 MICRON & LARGER
REPLACMENT FILTER P/N: 4770089
WEIGHT: 370 LBS.
FINISH: TEXTURED ENAMEL BEIGE
THESE DRAWINGS AND SPECIFICATIONS ARE THE EXCLUSIVE PROPERTY OF SIMCO-ION, AN ITW COMPANY, ISSUED IN STRICT CONFIDENCE AND SHALL NOT, WITHOUT THE PRIOR WRITTEN PERMISSION OF SIMCO-ION, AN ITW COMPANY, BE REPRODUCED, COPIED, OR USED FOR ANY PURPOSE WHATSOEVER EXCEPT THE MANUFACTURE OF ARTICLES FOR SIMCO-ION, AN ITW COMPANY.
ALL DIMENSIONS ARE REFERENCE ONLY
TITLE
CANISTER COLL SYS
800 CFM WITHOUT SILENCER
MATERIAL
FINISH
THIRD ANGLE PROJECTION
125 FINISH ALL OVER
SIMCO ION
An ITW Company
2257 NORTH PENN ROAD
HATFIELD, PA USA
19440-1998
DRAFTSMAN MFS
DATE 01/17/96
CHECKER
DATE
PROJ ENGR TG
DATE 01/17/96
MFGR ENGR
DATE
FILE NAME
SCALE: 1:15
DRAWING NUMBER
102-0310-00
SHT 1 OF 1
REV
DESCRIPTION
ECN
DATE

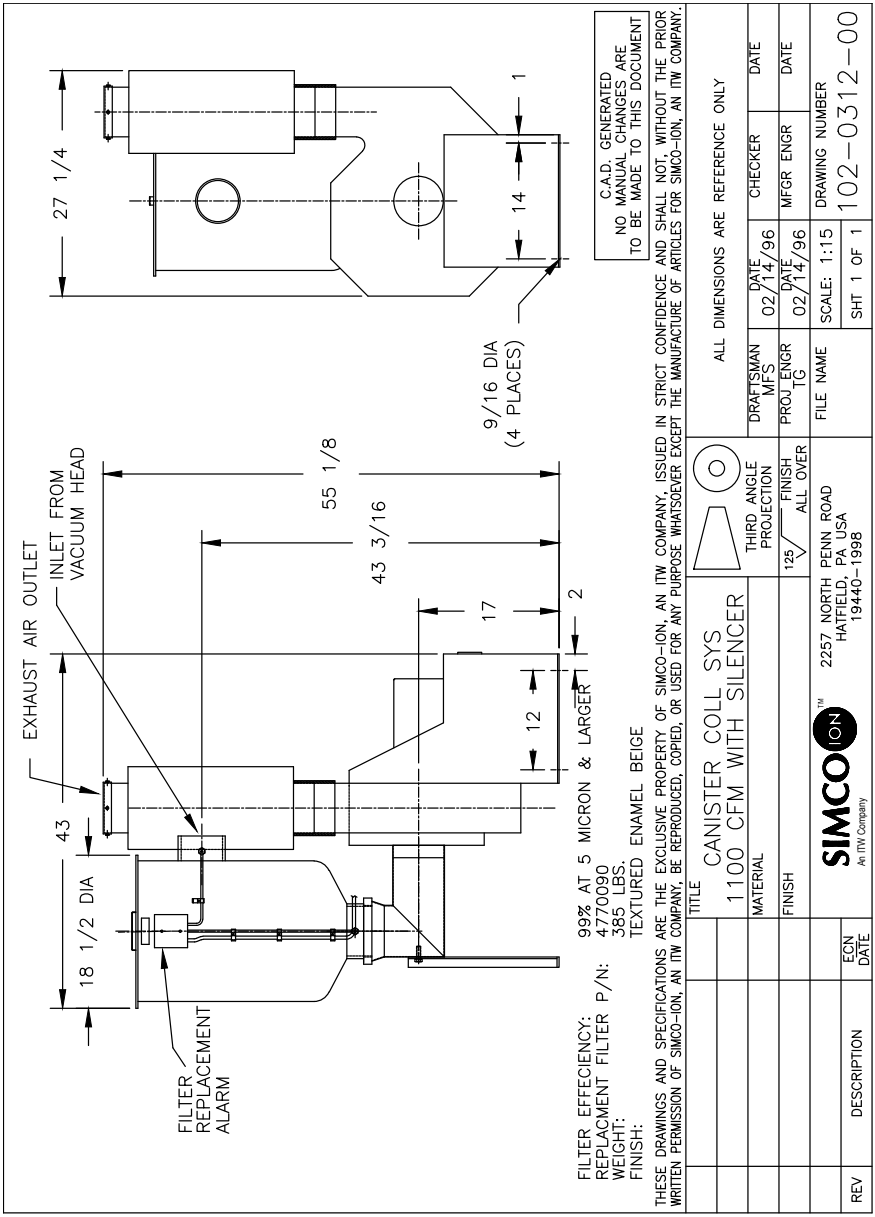
EXHAUST AIR OUTLET
INLET FROM VACUUM HEAD
FILTER REPLACEMENT ALARM
18 1/2 DIA
43
55 1/8
43 3/16
17
12
2
27 1/4
14
1
9/16 DIA (4 PLACES)
C.A.D. GENERATED NO MANUAL CHANGES ARE TO BE MADE TO THIS DOCUMENT
FILTER EFFECIENCY: 99% AT 5 MICRON & LARGER
REPLACMENT FILTER P/N: 4770090
WEIGHT: 385 LBS.
FINISH: TEXTURED ENAMEL BEIGE
THESE DRAWINGS AND SPECIFICATIONS ARE THE EXCLUSIVE PROPERTY OF SIMCO-ION, AN ITW COMPANY, ISSUED IN STRICT CONFIDENCE AND SHALL NOT, WITHOUT THE PRIOR WRITTEN PERMISSION OF SIMCO-ION, AN ITW COMPANY, BE REPRODUCED, COPIED, OR USED FOR ANY PURPOSE WHATSOEVER EXCEPT THE MANUFACTURE OF ARTICLES FOR SIMCO-ION, AN ITW COMPANY.
ALL DIMENSIONS ARE REFERENCE ONLY
DRAFTSMAN MFS DATE 02/14/96
CHECKER DATE
PROJ ENGR TG DATE 02/14/96
MFGR ENGR DATE
FILE NAME
SCALE: 1:15
DRAWING NUMBER 102-0312-00
SHT 1 OF 1
THIRD ANGLE PROJECTION
125 FINISH ALL OVER
TITLE CANISTER COLL SYS 1100 CFM WITH SILENCER
MATERIAL
FINISH
SIMCO ION An ITW Company
2257 NORTH PENN ROAD HATFIELD, PA USA 19440-1998
REV DESCRIPTION ECN DATE

DRAWING NUMBER
5001065

BILL OF MATERIALS — DATE OF LAST ADDITION: 04/03/13

PART NO.	DESCRIPTION	MOTOR	INLET COLLAR	STARTER	MAG GA	XP VENT	DATE	DFTSMN	APPD
4010062	DCX–500 208–230/460 VAC, 60HZ	3 HP	3" DIA.	NO	NO	NO	--	--	--
4014138	DCX–500 220/380–415 VAC, 50HZ	3 HP	3" DIA.	NO	NO	NO	--	--	--
4015870	DCX–500 575 VAC, 60HZ	3 HP	3" DIA.	NO	NO	NO	04/03/13	MFS	SRM

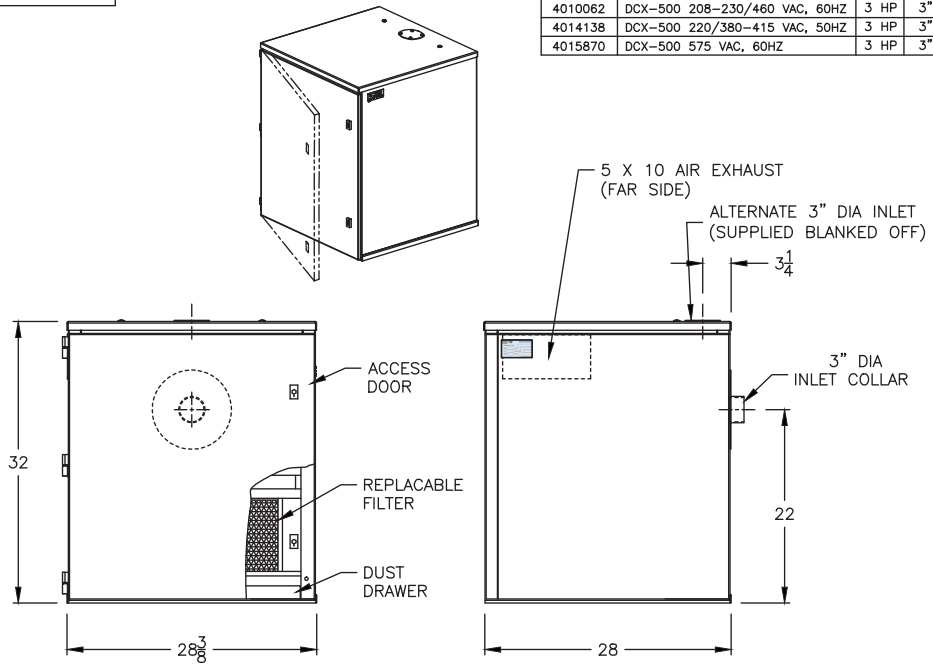

GENERAL SPECIFICATIONS

MAXIMUM AIRFLOW
600 CFM @ 4" H^2O

HORSE POWER RATING: 3 HP

FULL LOAD CURRENT
575V 60Hz 3ø: 2.9 AMPS
460V 60Hz 3ø: 3.7 AMPS
230V 60Hz 3ø: 7.4 AMPS
208V 60Hz 3ø: 7.9 AMPS
415V 50Hz 3ø: 4.2 AMPS
380V 50Hz 3ø: 4.7 AMPS
220V 50Hz 3ø: 8.2 AMPS

NOISE RATING
73dB "A" SCALE AVG @ 10'

FILTER DATA
REPLACEMENT P/N 4470267
TYPE: ULTRTEK CARTRIDGE
MATERIAL: PLEATED SYNTHETIC
DIMENSIONS: 13.84" DIA. X 8" LG.
QUANTITY: 1 FILTER
DUST DRAWER: 18 X 18.88 X 1.75
EFFICIENCY: 99% @ 1 MICRON
(MERV 10 RATING)

CABINET DATA
MATERIAL: STEEL
COLOR: EXTERIOR GREY (RAL 7001)
FINISH: FINE TEXTURE ENAMEL
WEIGHT: 300 LBS. APPX.

C.A.D. GENERATED
NO MANUAL CHANGES ARE
TO BE MADE TO THIS DOCUMENT

THESE DRAWINGS AND SPECIFICATIONS ARE THE EXCLUSIVE PROPERTY OF SIMCO–ION, AN ITW COMPANY, ISSUED IN STRICT CONFIDENCE AND SHALL NOT, WITHOUT THE PRIOR WRITTEN PERMISSION OF SIMCO–ION, AN ITW COMPANY, BE REPRODUCED, COPIED, OR USED FOR ANY PURPOSE WHATSOEVER EXCEPT THE MANUFACTURE OF ARTICLES FOR SIMCO–ION, AN ITW COMPANY

REV	DESCRIPTION	ECN DATE
D	UP–DATED FILTER EFFICIENCY	ECN2940 08/03/11
C	CHANGED TO PREMIUM EFFICIENCY MOTOR	ECN2865 06/08/11
B	CHG'D FILTER MAT'L. FROM PLEATED MEDIA	ECN1643 11–17–05
A	FINAL PRODUCTION DESIGN	1280 1–6–04

DIMENSIONS IN INCHES; DO NOT SCALE DRAWING
TOLERANCES UNLESS SPECIFIED
.XXX=±0.005 .XX=±0.01
FRACTIONS=±1/64 ANGLE=±1/2°
MATERIAL SEE NOTES
FINISH SEE NOTES

THIRD ANGLE PROJECTION
FINISH ALL OVER

SIMCO ION™ An ITW Company
2257 NORTH PENN ROAD
HATFIELD, PA USA
19440–1998

TITLE
DUST COLLECTOR
3 HP TYPE DCX–500

DRAFTSMAN SRM	DATE 11–11–03	CHECKER R.D.S.	DATE 11–13–03
PROJ ENGR SRM	DATE 11–13–03	MFGR ENGR	DATE
FILE NAME	SCALE 1/10	DRAWING NUMBER	
	SHEET 1 OF 1	5001065	

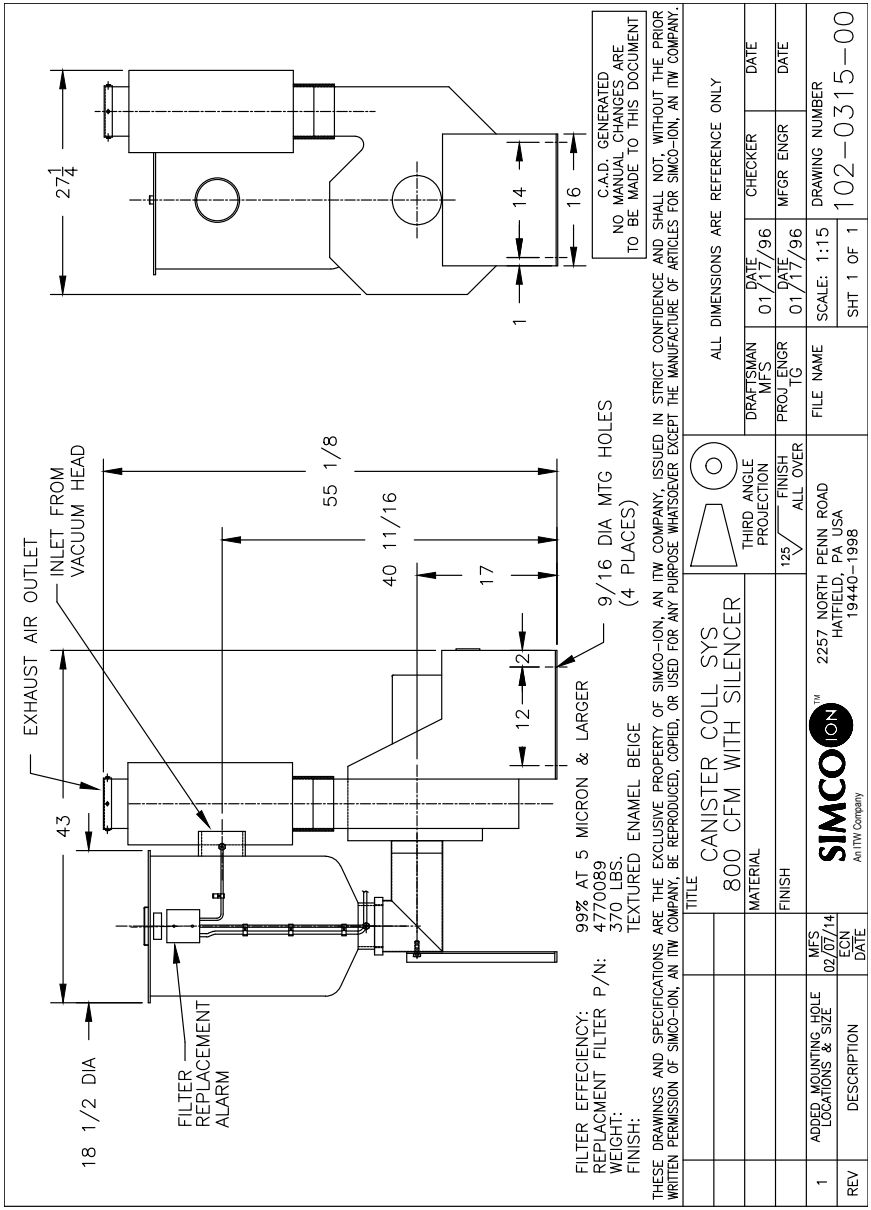
EXHAUST AIR OUTLET
INLET FROM VACUUM HEAD
43
18 1/2 DIA
FILTER REPLACEMENT ALARM
55 1/8
40 11/16
17
12
2
9/16 DIA MTG HOLES (4 PLACES)
27 1/4
14
16
1
C.A.D. GENERATED NO MANUAL CHANGES ARE TO BE MADE TO THIS DOCUMENT
FILTER EFFECIENCY: 99% AT 5 MICRON & LARGER
REPLACMENT FILTER P/N: 4770089
WEIGHT: 370 LBS.
FINISH: TEXTURED ENAMEL BEIGE
THESE DRAWINGS AND SPECIFICATIONS ARE THE EXCLUSIVE PROPERTY OF SIMCO-ION, AN ITW COMPANY, ISSUED IN STRICT CONFIDENCE AND SHALL NOT, WITHOUT THE PRIOR WRITTEN PERMISSION OF SIMCO-ION, AN ITW COMPANY, BE REPRODUCED, COPIED, OR USED FOR ANY PURPOSE WHATSOEVER EXCEPT THE MANUFACTURE OF ARTICLES FOR SIMCO-ION, AN ITW COMPANY.
REV
DESCRIPTION
DATE
1
ADDED MOUNTING HOLE LOCATIONS & SIZE
MFS 02/07/14
ECN
TITLE
CANISTER COLL SYS 800 CFM WITH SILENCER
MATERIAL
FINISH
SIMCO ION
An ITW Company
2257 NORTH PENN ROAD
HATFIELD, PA USA
19440-1998
THIRD ANGLE PROJECTION
125 FINISH ALL OVER
ALL DIMENSIONS ARE REFERENCE ONLY
DRAFTSMAN MFS 01/17/96
PROJ ENGR TG 01/17/96
CHECKER
MFGR ENGR
DATE
FILE NAME
SCALE: 1:15
SHT 1 OF 1
DRAWING NUMBER
102-0315-00

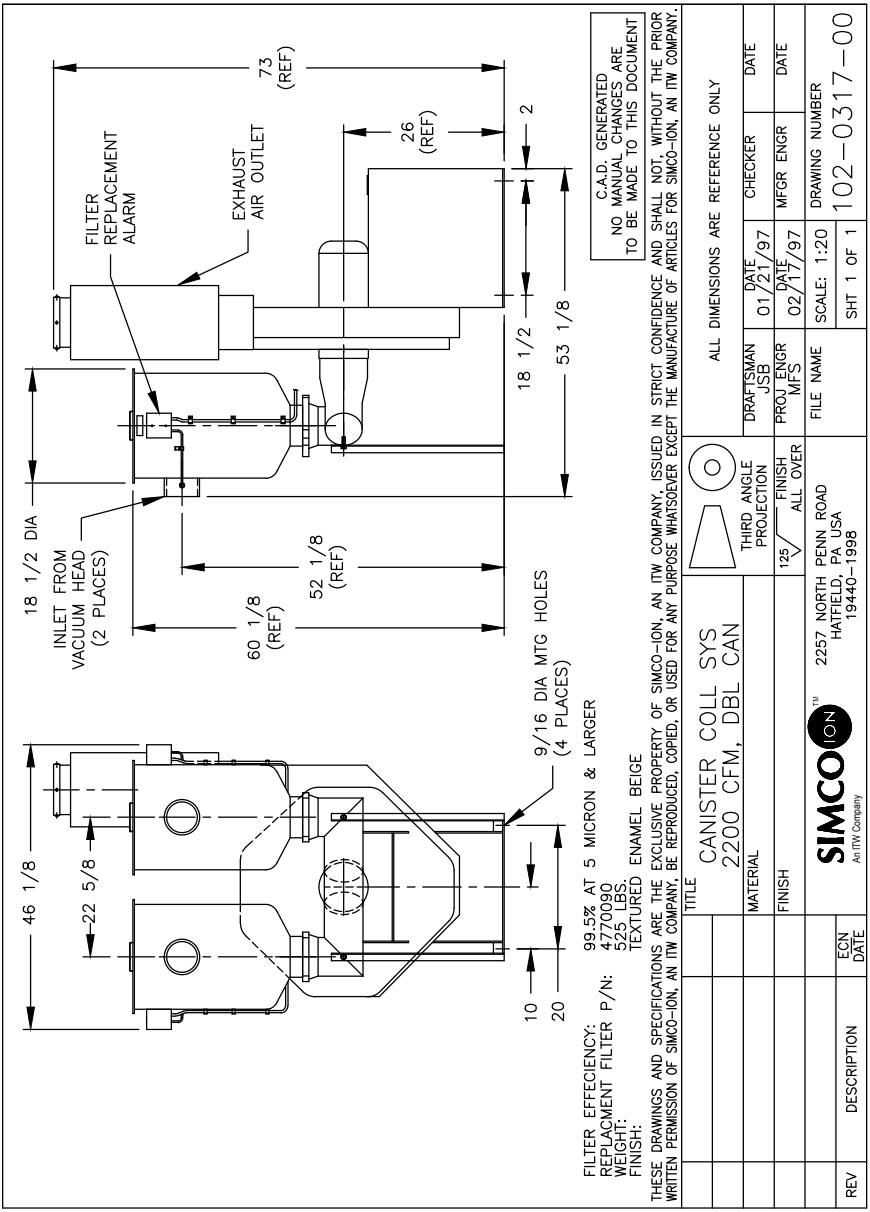
73 (REF)
26 (REF)
2
FILTER REPLACEMENT ALARM
EXHAUST AIR OUTLET
18 1/2 DIA
INLET FROM VACUUM HEAD (2 PLACES)
18 1/2
53 1/8
52 1/8 (REF)
60 1/8 (REF)
9/16 DIA MTG HOLES (4 PLACES)
46 1/8
22 5/8
10
20
C.A.D. GENERATED
NO MANUAL CHANGES ARE TO BE MADE TO THIS DOCUMENT
FILTER EFFECIENCY: 99.5% AT 5 MICRON & LARGER
REPLACMENT FILTER P/N: 4770090
WEIGHT: 525 LBS.
FINISH: TEXTURED ENAMEL BEIGE
THESE DRAWINGS AND SPECIFICATIONS ARE THE EXCLUSIVE PROPERTY OF SIMCO-ION, AN ITW COMPANY, ISSUED IN STRICT CONFIDENCE AND SHALL NOT, WITHOUT THE PRIOR WRITTEN PERMISSION OF SIMCO-ION, AN ITW COMPANY, BE REPRODUCED, COPIED, OR USED FOR ANY PURPOSE WHATSOEVER EXCEPT THE MANUFACTURE OF ARTICLES FOR SIMCO-ION, AN ITW COMPANY.
ALL DIMENSIONS ARE REFERENCE ONLY
THIRD ANGLE PROJECTION
125 FINISH ALL OVER
DRAFTSMAN JSB
DATE 01/21/97
CHECKER
DATE
PROJ ENGR MFS
DATE 02/17/97
MFGR ENGR
DATE
FILE NAME
SCALE: 1:20
SHT 1 OF 1
DRAWING NUMBER
102-0317-00
TITLE
CANISTER COLL SYS 2200 CFM, DBL CAN
MATERIAL
FINISH
SIMCO ION
An ITW Company
2257 NORTH PENN ROAD
HATFIELD, PA USA
19440-1998
REV
DESCRIPTION
ECN
DATE

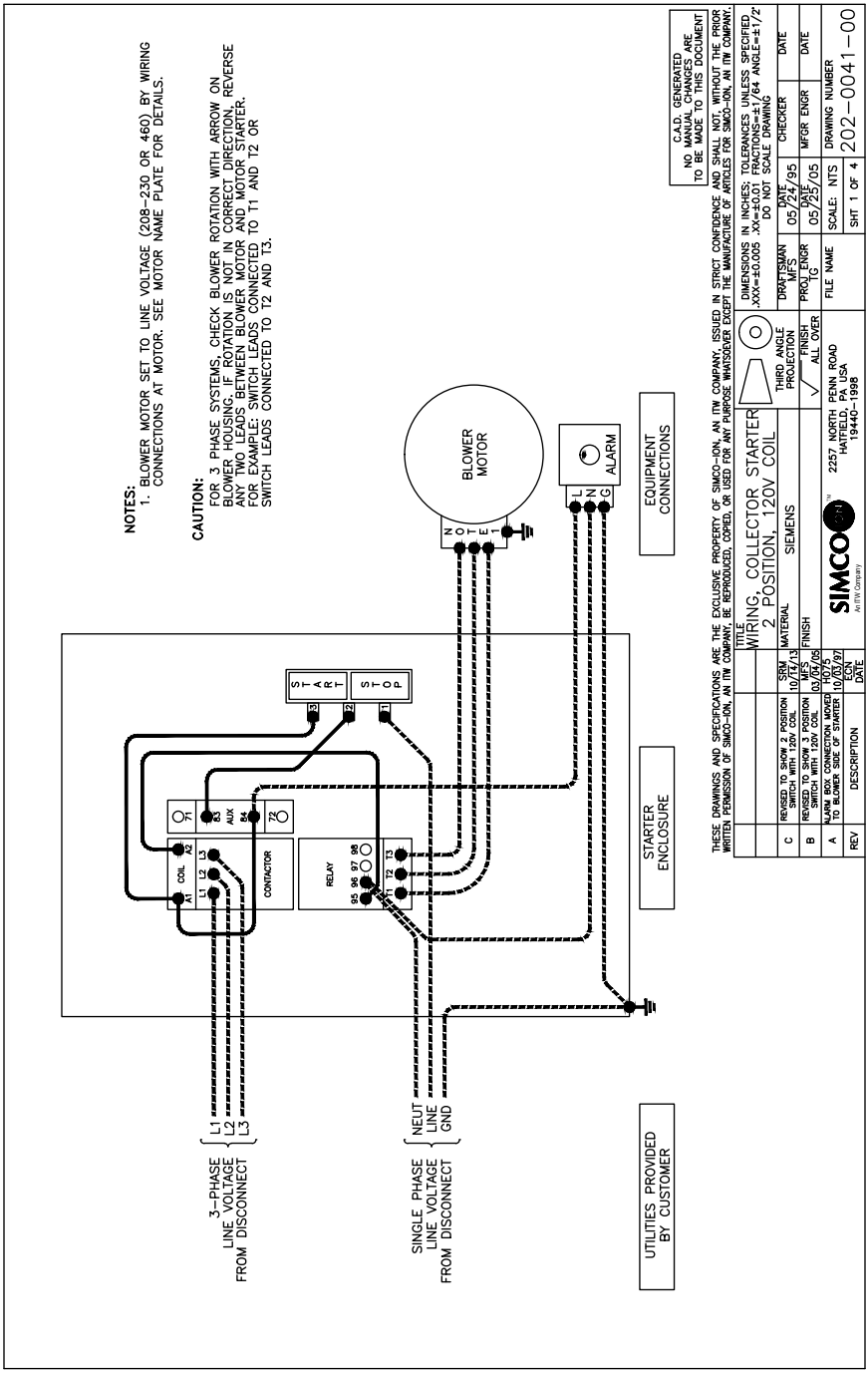
NOTES:
1. BLOWER MOTOR SET TO LINE VOLTAGE (208–230 OR 460) BY WIRING CONNECTIONS AT MOTOR. SEE MOTOR NAME PLATE FOR DETAILS.
CAUTION:
FOR 3 PHASE SYSTEMS, CHECK BLOWER ROTATION WITH ARROW ON BLOWER HOUSING. IF ROTATION IS NOT IN CORRECT DIRECTION, REVERSE ANY TWO LEADS BETWEEN BLOWER MOTOR AND MOTOR STARTER. FOR EXAMPLE: SWITCH LEADS CONNECTED TO T1 AND T2 OR SWITCH LEADS CONNECTED TO T2 AND T3.
BLOWER MOTOR
N O T E
ALARM
L N G
EQUIPMENT CONNECTIONS
STARTER ENCLOSURE
UTILITIES PROVIDED BY CUSTOMER
3–PHASE LINE VOLTAGE FROM DISCONNECT
L1 L2 L3
SINGLE PHASE LINE VOLTAGE FROM DISCONNECT
NEUT LINE GND
START
STOP
CONTACTOR
COIL
A1 A2
L1 L2 L3
AUX
RELAY
95 96 97 98
T1 T2 T3
C.A.D. GENERATED
NO MANUAL CHANGES ARE TO BE MADE TO THIS DOCUMENT
THESE DRAWINGS AND SPECIFICATIONS ARE THE EXCLUSIVE PROPERTY OF SIMCO–ION, AN ITW COMPANY, ISSUED IN STRICT CONFIDENCE AND SHALL NOT, WITHOUT THE PRIOR WRITTEN PERMISSION OF SIMCO–ION, AN ITW COMPANY, BE REPRODUCED, COPIED, OR USED FOR ANY PURPOSE WHATSOEVER EXCEPT THE MANUFACTURE OF ARTICLES FOR SIMCO–ION, AN ITW COMPANY.
TITLE
WIRING, COLLECTOR STARTER 2 POSITION, 120V COIL
SIEMENS
MATERIAL
FINISH
SRM 10/14/13
MES 03/17/05
HDT 10/03/97
ECN DATE
C REVISED TO SHOW 2 POSITION SWITCH WITH 120V COIL
B REVISED TO SHOW 3 POSITION SWITCH WITH 120V COIL
A ALARM BOX CONNECTION MOVED TO BLOWER SIDE OF STARTER
REV DESCRIPTION
SIMCO ION
ITW Company
2257 NORTH PENN ROAD
HATFIELD, PA USA
19440–1998
DIMENSIONS IN INCHES; TOLERANCES UNLESS SPECIFIED: .XX=±0.01 FRACTIONS=±1/64 ANGLE=±1/2° .XXX=±0.005 DO NOT SCALE DRAWING
THIRD ANGLE PROJECTION
FINISH ALL OVER
DRAFTSMAN MFS DATE 05/24/95
PROJ. ENGR J.C. DATE 05/29/05
FILE NAME
CHECKER
MFGR ENGR
DATE
SCALE: NTS
DRAWING NUMBER 202–0041–00
SHT 1 OF 4

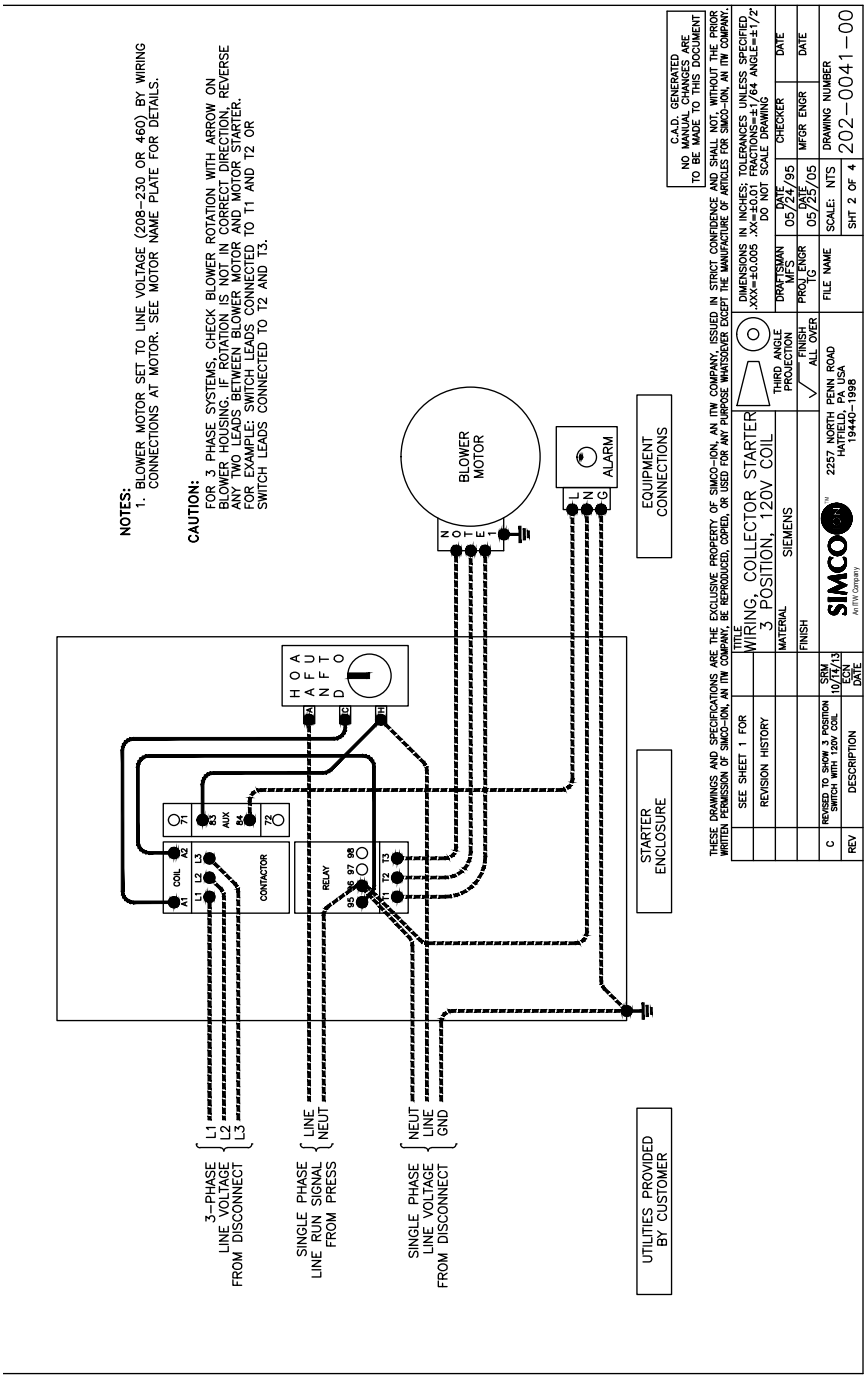
NOTES:
1. BLOWER MOTOR SET TO LINE VOLTAGE (208–230 OR 460) BY WIRING CONNECTIONS AT MOTOR. SEE MOTOR NAME PLATE FOR DETAILS.
CAUTION:
FOR 3 PHASE SYSTEMS, CHECK BLOWER ROTATION WITH ARROW ON BLOWER HOUSING. IF ROTATION IS NOT IN CORRECT DIRECTION, REVERSE ANY TWO LEADS BETWEEN BLOWER MOTOR AND MOTOR STARTER. FOR EXAMPLE: SWITCH LEADS CONNECTED TO T1 AND T2 OR SWITCH LEADS CONNECTED TO T2 AND T3.
BLOWER MOTOR
N O T E
ALARM
N G
EQUIPMENT CONNECTIONS
H O A
A F U
N T
D O
A
C
H
A1 COIL A2
L1 L2 L3
CONTACTOR
13
14
AUX
84
72
RELAY
95 96 97 98
T1 T2 T3
STARTER ENCLOSURE
3–PHASE LINE VOLTAGE FROM DISCONNECT
L1
L2
L3
SINGLE PHASE LINE RUN SIGNAL FROM PRESS
LINE
NEUT
SINGLE PHASE LINE VOLTAGE FROM DISCONNECT
NEUT
LINE
GND
UTILITIES PROVIDED BY CUSTOMER
THESE DRAWINGS AND SPECIFICATIONS ARE THE EXCLUSIVE PROPERTY OF SIMCO–ION, AN ITW COMPANY, ISSUED IN STRICT CONFIDENCE AND SHALL NOT, WITHOUT THE PRIOR WRITTEN PERMISSION OF SIMCO–ION, AN ITW COMPANY, BE REPRODUCED, COPIED, OR USED FOR ANY PURPOSE WHATSOEVER EXCEPT THE MANUFACTURE OF ARTICLES FOR SIMCO–ION, AN ITW COMPANY.
SEE SHEET 1 FOR REVISION HISTORY
TITLE
WIRING, COLLECTOR STARTER
3 POSITION, 120V COIL
MATERIAL
SIEMENS
FINISH
REV
DESCRIPTION
ECN
DATE
C
REVISED TO SHOW 3 POSITION SWITCH WITH 120V COIL
SRM
10/14/13
SIMCO
ION
ITW COMPANY
2257 NORTH PENN ROAD
HATFIELD, PA
19440–1998
THIRD ANGLE PROJECTION
ALL OVER
DIMENSIONS IN INCHES: TOLERANCES UNLESS SPECIFIED
.XX=±0.01 FRACTIONS=±1/64 ANGLE=±1/2°
.XXX=±0.005 DO NOT SCALE DRAWING
DRAFTSMAN
MFS
DATE
05/24/95
CHECKER
DATE
PROJ ENGR
TG
05/25/05
MFGR ENGR
DATE
FILE NAME
SCALE: NTS
SHT 2 OF 4
DRAWING NUMBER
202–0041–00
C.A.D. GENERATED
NO MANUAL CHANGES ARE TO BE MADE TO THIS DOCUMENT

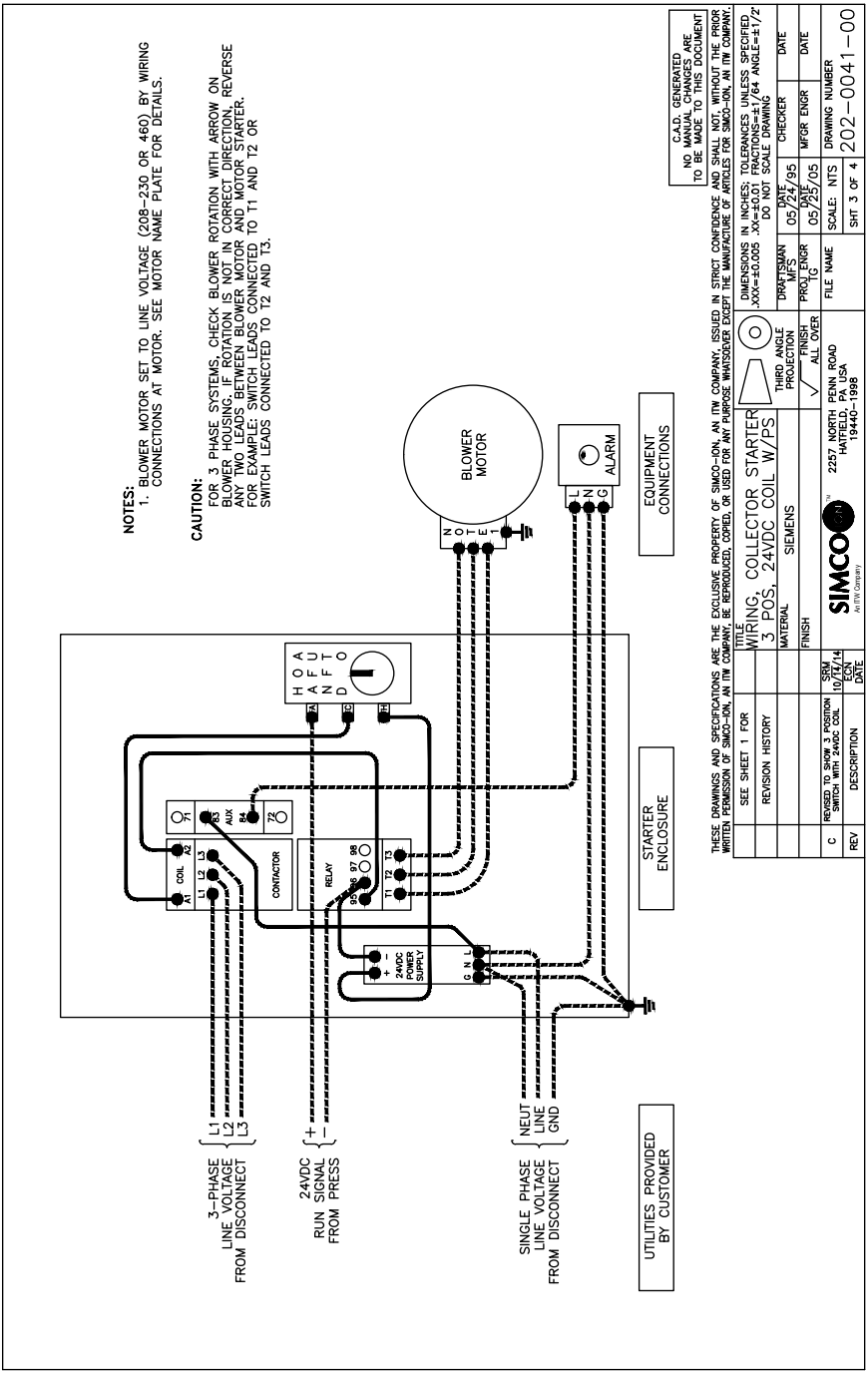
NOTES:
1. BLOWER MOTOR SET TO LINE VOLTAGE (208–230 OR 460) BY WIRING CONNECTIONS AT MOTOR. SEE MOTOR NAME PLATE FOR DETAILS.
CAUTION:
FOR 3 PHASE SYSTEMS, CHECK BLOWER ROTATION WITH ARROW ON BLOWER HOUSING. IF ROTATION IS NOT IN CORRECT DIRECTION, REVERSE ANY TWO LEADS BETWEEN BLOWER MOTOR AND MOTOR STARTER.
FOR EXAMPLE: SWITCH LEADS CONNECTED TO T1 AND T2 OR SWITCH LEADS CONNECTED TO T2 AND T3.
BLOWER MOTOR
ALARM
EQUIPMENT CONNECTIONS
STARTER ENCLOSURE
UTILITIES PROVIDED BY CUSTOMER
3–PHASE LINE VOLTAGE FROM DISCONNECT
L1 L2 L3
24VDC RUN SIGNAL FROM PRESS
SINGLE PHASE LINE VOLTAGE FROM DISCONNECT
NEUT LINE GND
CONTACTOR
RELAY
24VDC POWER SUPPLY
HOA AFUNTO
WIRING, COLLECTOR STARTER 3 POS, 24VDC COIL W/PS
SIEMENS
SIMCO-ION
2257 NORTH PENN ROAD HATFIELD, PA USA 19440–1998
202–0041–00

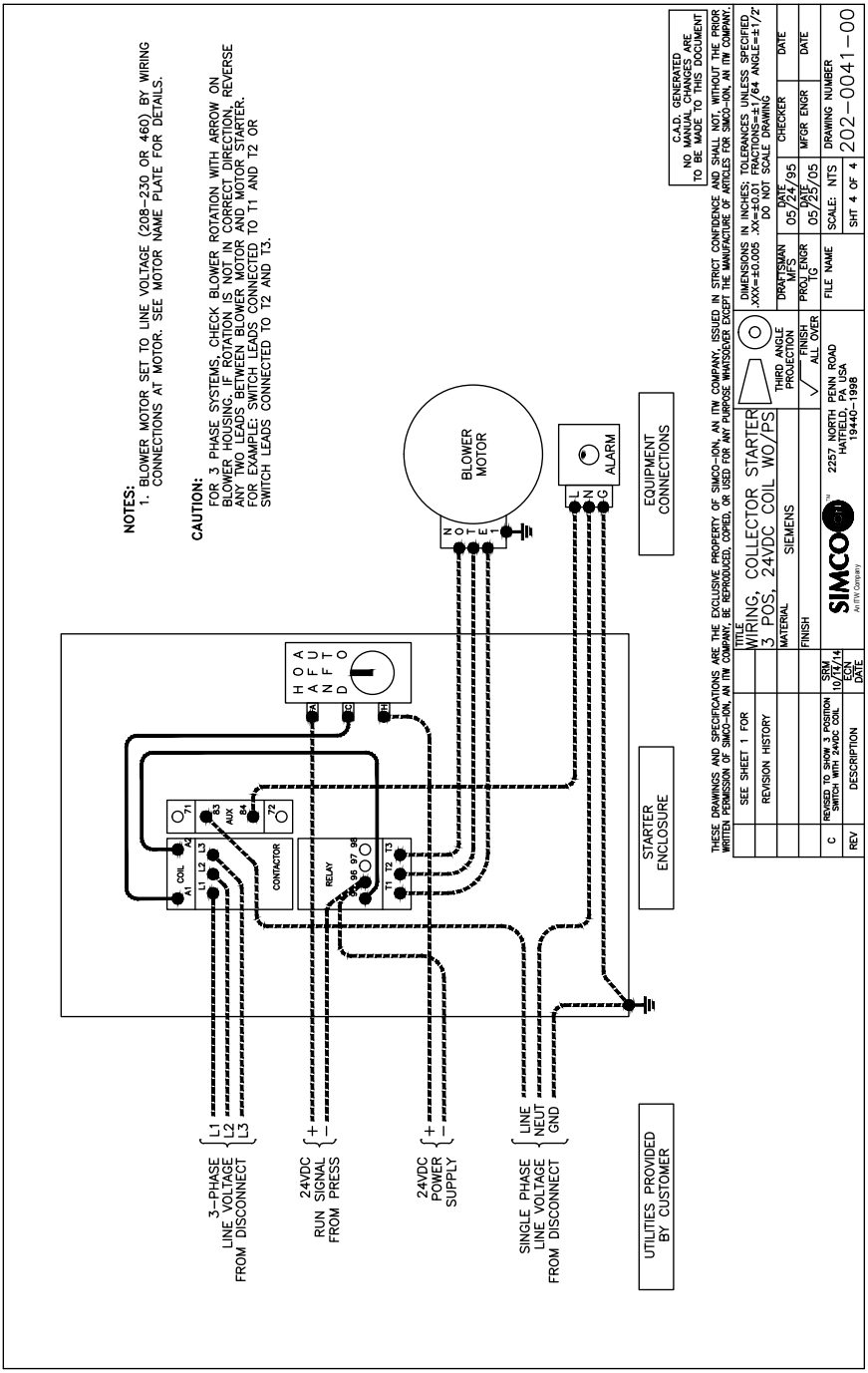
NOTES:
1. BLOWER MOTOR SET TO LINE VOLTAGE (208–230 OR 460) BY WIRING CONNECTIONS AT MOTOR. SEE MOTOR NAME PLATE FOR DETAILS.
CAUTION:
FOR 3 PHASE SYSTEMS, CHECK BLOWER ROTATION WITH ARROW ON BLOWER HOUSING. IF ROTATION IS NOT IN CORRECT DIRECTION, REVERSE ANY TWO LEADS BETWEEN BLOWER MOTOR AND MOTOR STARTER. FOR EXAMPLE: SWITCH LEADS CONNECTED TO T1 AND T2 OR SWITCH LEADS CONNECTED TO T2 AND T3.
BLOWER MOTOR
ALARM
EQUIPMENT CONNECTIONS
STARTER ENCLOSURE
UTILITIES PROVIDED BY CUSTOMER
3–PHASE LINE VOLTAGE FROM DISCONNECT
24VDC RUN SIGNAL FROM PRESS
24VDC POWER SUPPLY
SINGLE PHASE LINE VOLTAGE FROM DISCONNECT
CONTACTOR
RELAY
AUX
COIL
H O A
A F U
N F T
D O
C.A.D. GENERATED
NO MANUAL CHANGES ARE TO BE MADE TO THIS DOCUMENT
THESE DRAWINGS AND SPECIFICATIONS ARE THE EXCLUSIVE PROPERTY OF SIMCO–ION, AN ITW COMPANY, ISSUED IN STRICT CONFIDENCE AND SHALL NOT, WITHOUT THE PRIOR WRITTEN PERMISSION OF SIMCO–ION, AN ITW COMPANY, BE REPRODUCED, COPIED, OR USED FOR ANY PURPOSE WHATSOEVER EXCEPT THE MANUFACTURE OF ARTICLES FOR SIMCO–ION, AN ITW COMPANY.
SEE SHEET 1 FOR REVISION HISTORY
TITLE
WIRING, COLLECTOR STARTER 3 POS, 24VDC COIL W/O/PS
MATERIAL
FINISH
SIEMENS
C
REVISED TO SHOW 3 POSITION SWITCH WITH 24vdc COIL
REV
DESCRIPTION
SIMCO–ION
An ITW Company
2257 NORTH PENN ROAD
HATFIELD, PA USA
19440–1998
THIRD ANGLE PROJECTION
FINISH ALL OVER
DIMENSIONS IN INCHES: TOLERANCES UNLESS SPECIFIED .XXX=±0.005 .XX=±0.01 FRACTIONS=±1/64 ANGLE=±1/2
DO NOT SCALE DRAWING
DRAFTSMAN MFS
DATE 05/24/95
CHECKER
DATE
PROJ. ENGR TG
DATE 05/25/05
MFGR ENGR
DATE
FILE NAME
SCALE: NTS
DRAWING NUMBER
202–0041–00
SHT 4 OF 4

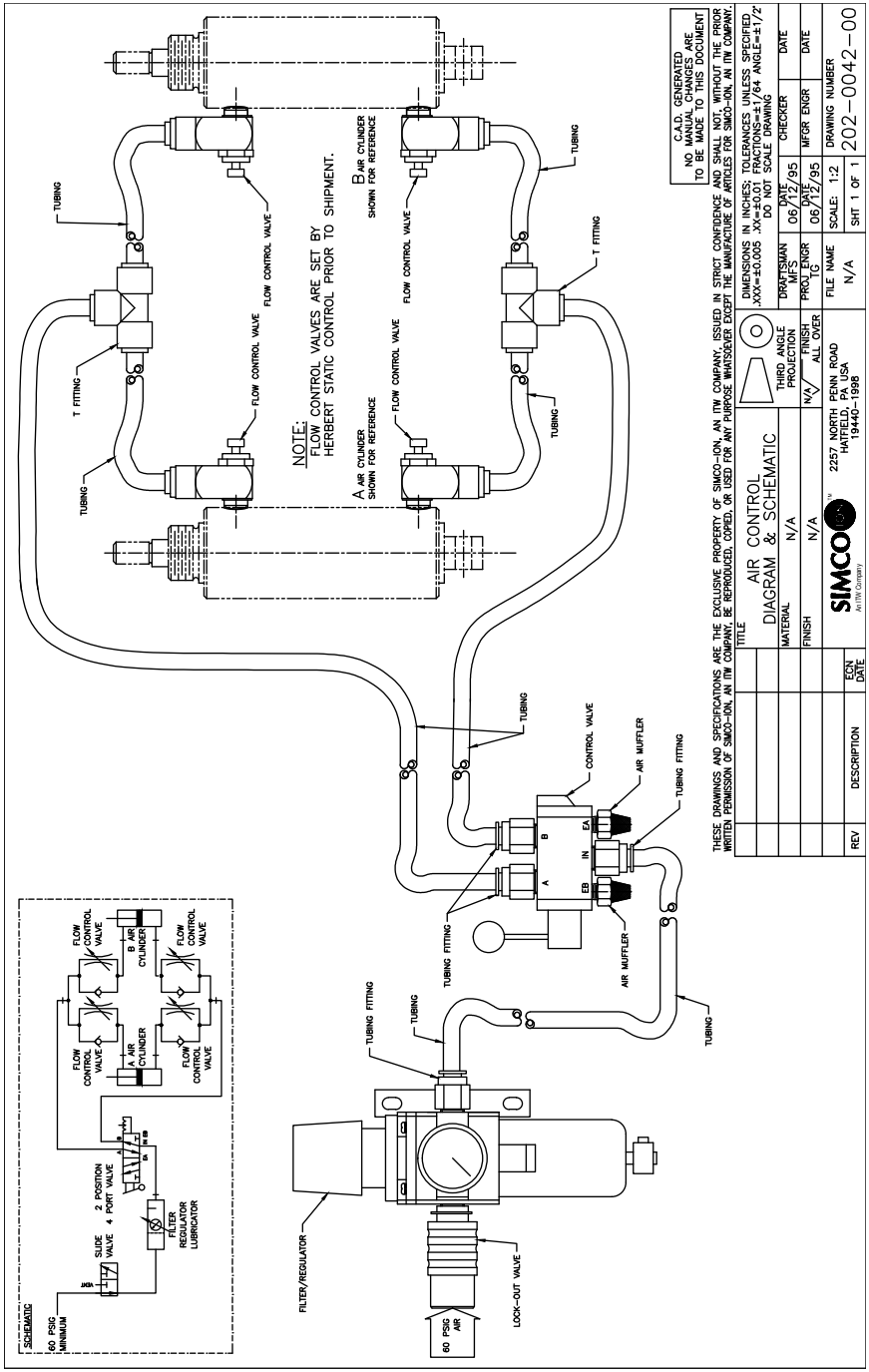
NOTE:
FLOW CONTROL VALVES ARE SET BY
HERBERT STATIC CONTROL PRIOR TO SHIPMENT.
A AIR CYLINDER SHOWN FOR REFERENCE
B AIR CYLINDER SHOWN FOR REFERENCE
FLOW CONTROL VALVE
T FITTING
TUBING
C.A.D. GENERATED
NO MANUAL CHANGES ARE
TO BE MADE TO THIS DOCUMENT
THESE DRAWINGS AND SPECIFICATIONS ARE THE EXCLUSIVE PROPERTY OF SIMCO-ION, AN ITW COMPANY, ISSUED IN STRICT CONFIDENCE AND SHALL NOT, WITHOUT THE PRIOR WRITTEN PERMISSION OF SIMCO-ION, AN ITW COMPANY, BE REPRODUCED, COPIED, OR USED FOR ANY PURPOSE WHATSOEVER EXCEPT THE MANUFACTURE OF ARTICLES FOR SIMCO-ION, AN ITW COMPANY.
DIMENSIONS IN INCHES: TOLERANCES UNLESS SPECIFIED
.XXX=±0.005 .XX=±0.01 FRACTIONS=±1/64 ANGLE=±1/2°
DO NOT SCALE DRAWING
THIRD ANGLE PROJECTION
TITLE
AIR CONTROL
DIAGRAM & SCHEMATIC
MATERIAL N/A
FINISH N/A
SIMCO
ITW Company
2257 NORTH PENN ROAD
HATFIELD, PA USA
19440-1998
DRAFTSMAN MFS 06/12/95
PROJ. ENGR 06/12/95
CHECKER
MFGR ENGR
DATE
FILE NAME N/A
SCALE: 1:2
SHT 1 OF 1
DRAWING NUMBER 202-0042-00
REV
DESCRIPTION
ECN DATE
SCHEMATIC
60 PSIG MINIMUM
SLIDE VALVE
2 POSITION 4 PORT VALVE
FILTER REGULATOR LUBRICATOR
A AIR CYLINDER
B AIR CYLINDER
FLOW CONTROL VALVE
CONTROL VALVE
AIR MUFFLER
TUBING FITTING
FILTER/REGULATOR
LOCK-OUT VALVE
60 PSIG AIR

Simco-Ion

2257 North Penn Road

Hatfield, PA 19440

(215) 822-6401

(800) 203-3419

www.simco-ion.com

customerservice@simco-ion.com

© 2019 Simco-Ion Printed in the U.S.A.